POWER & DATA

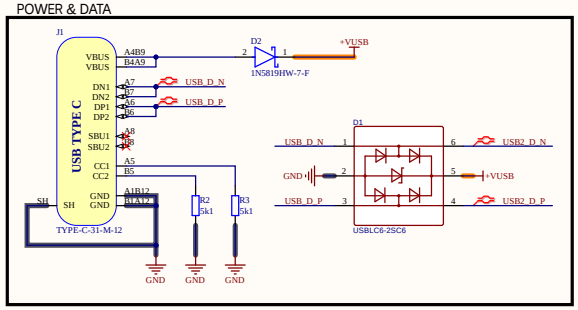

USB TO UART

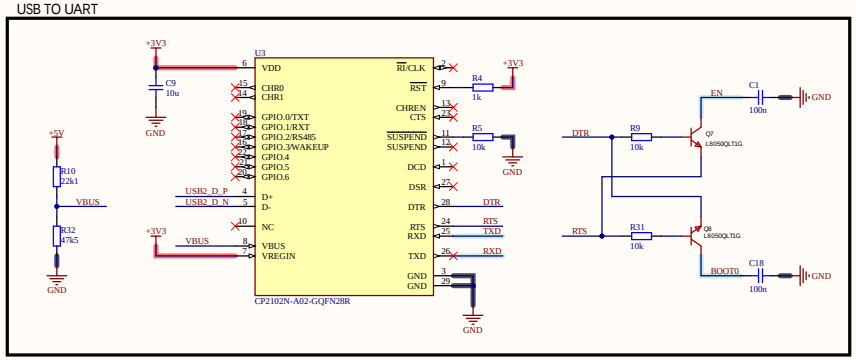

BUCK CONVERTER

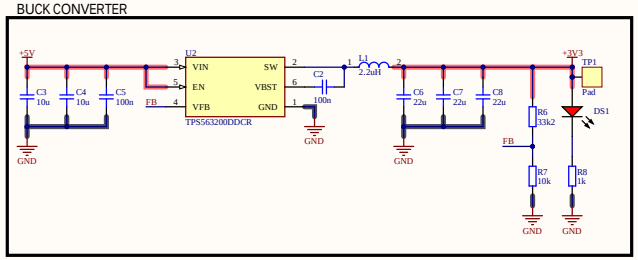

LED

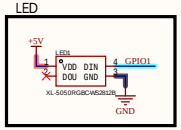

GPIO BREAKOUT

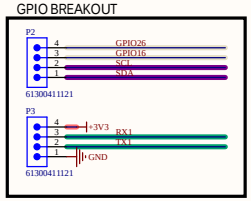

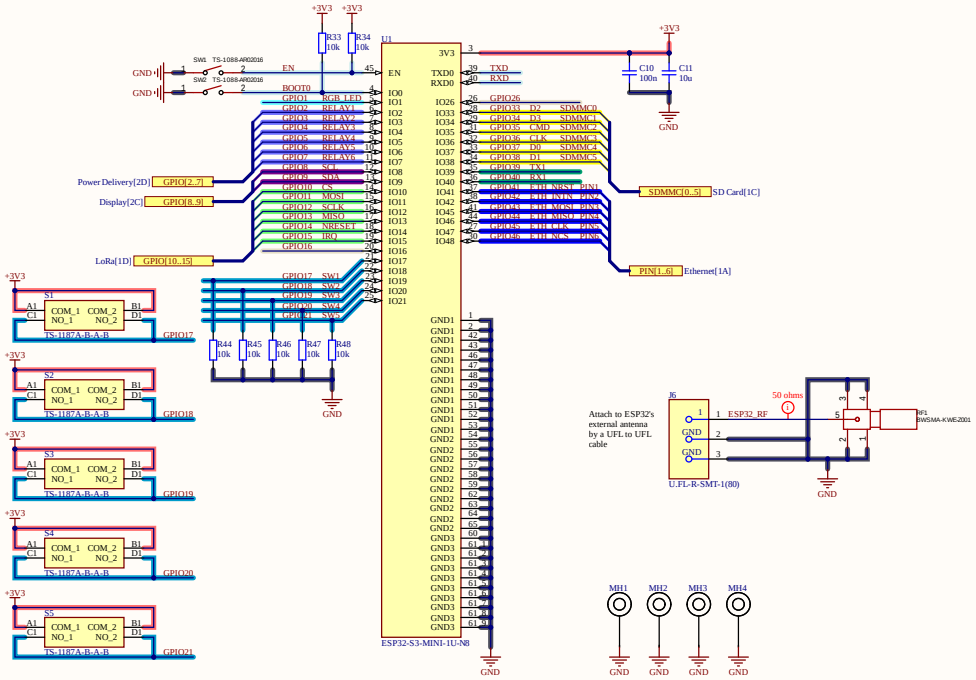

Title		
MCU		
Size	Number	Revision
A2		1
Date: 2/27/2026		Sheet of 7
File: C:\Users\...\MCU.SchDoc		Drawn By:

LoRa POWER SUPPLY

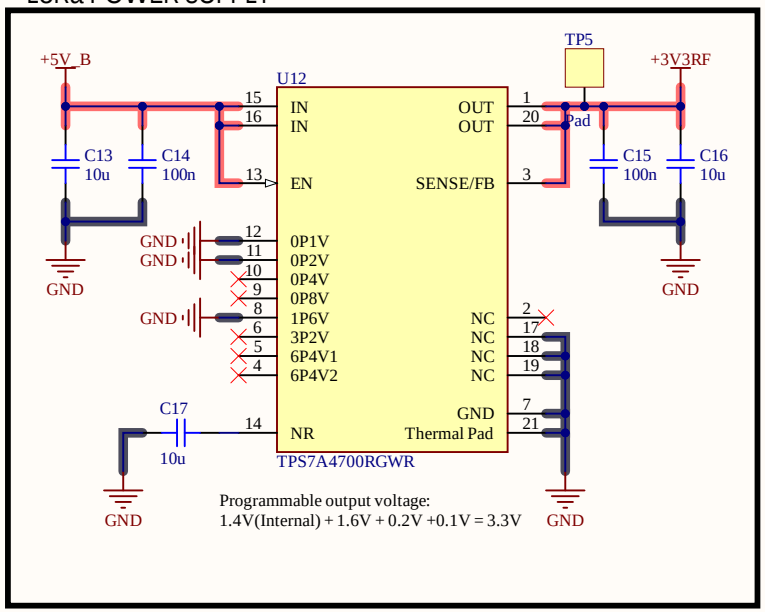

LoRa

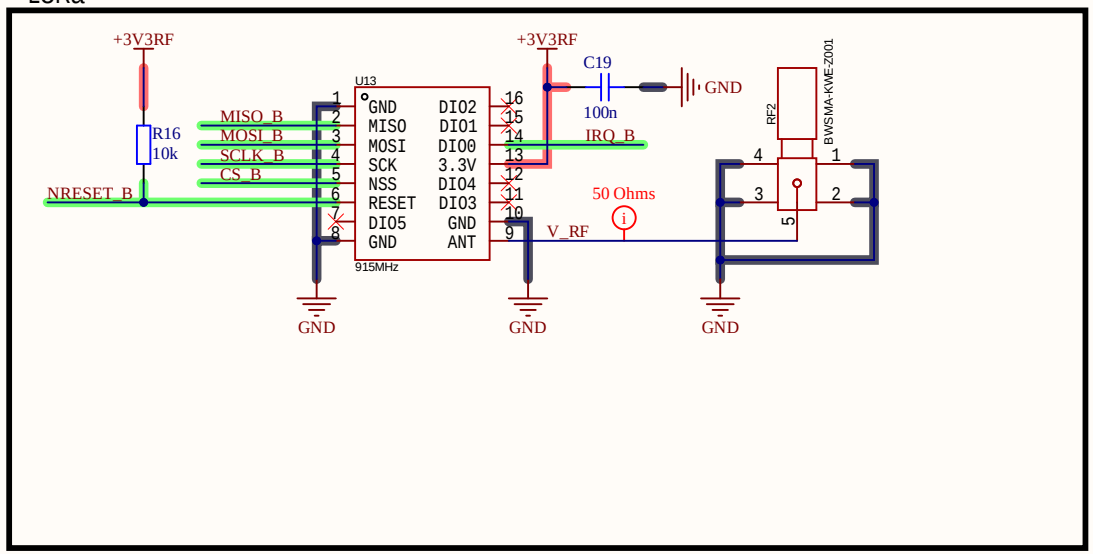

0 OHM BRIDGE

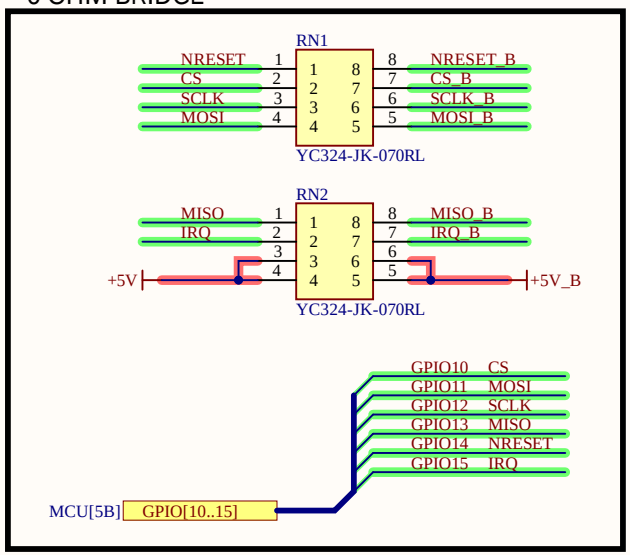

Title		
LoRa		
Size: A4	Number	Revision: 1
Date: 2/27/2026		Sheet of 7
File: C:\Users\..\LoRa.SchDoc		Drawn By:

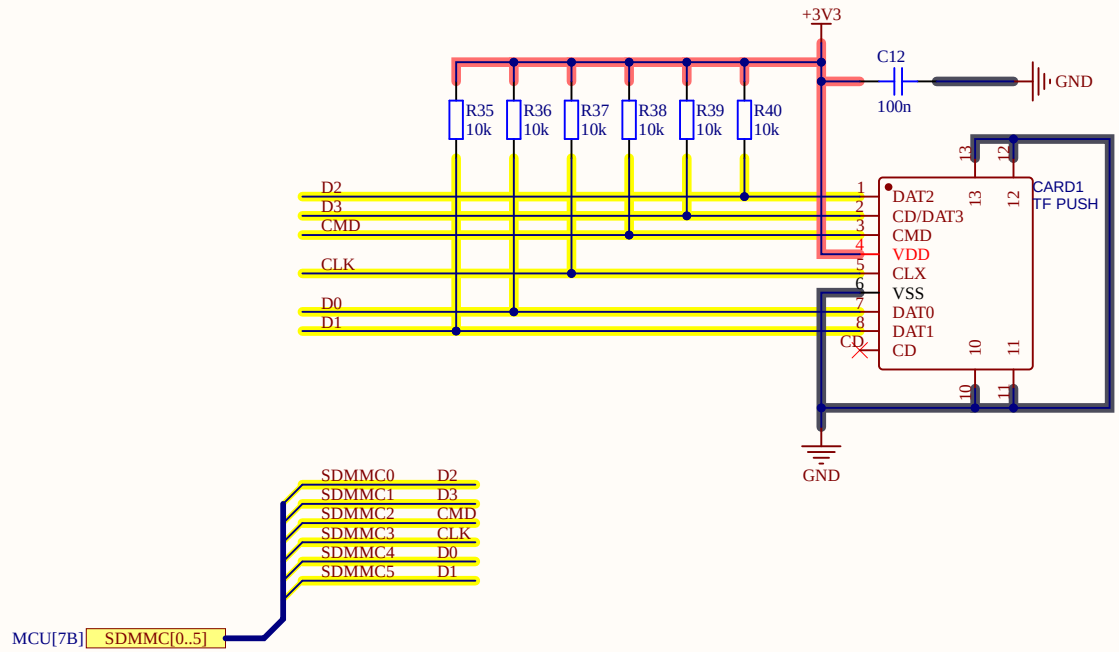

Title SD Card		
Size A4	Number	Revision 1
Date: 2/27/2026		Sheet of 7
File: C:\Users\..\SD Card.SchDoc		Drawn By:

BOOST CONVERTER

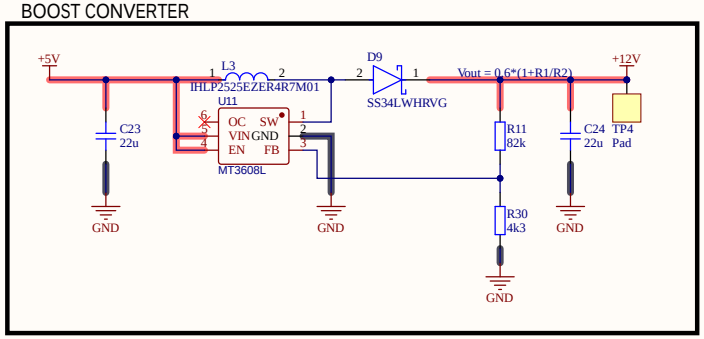

SWITCHING CIRCUIT

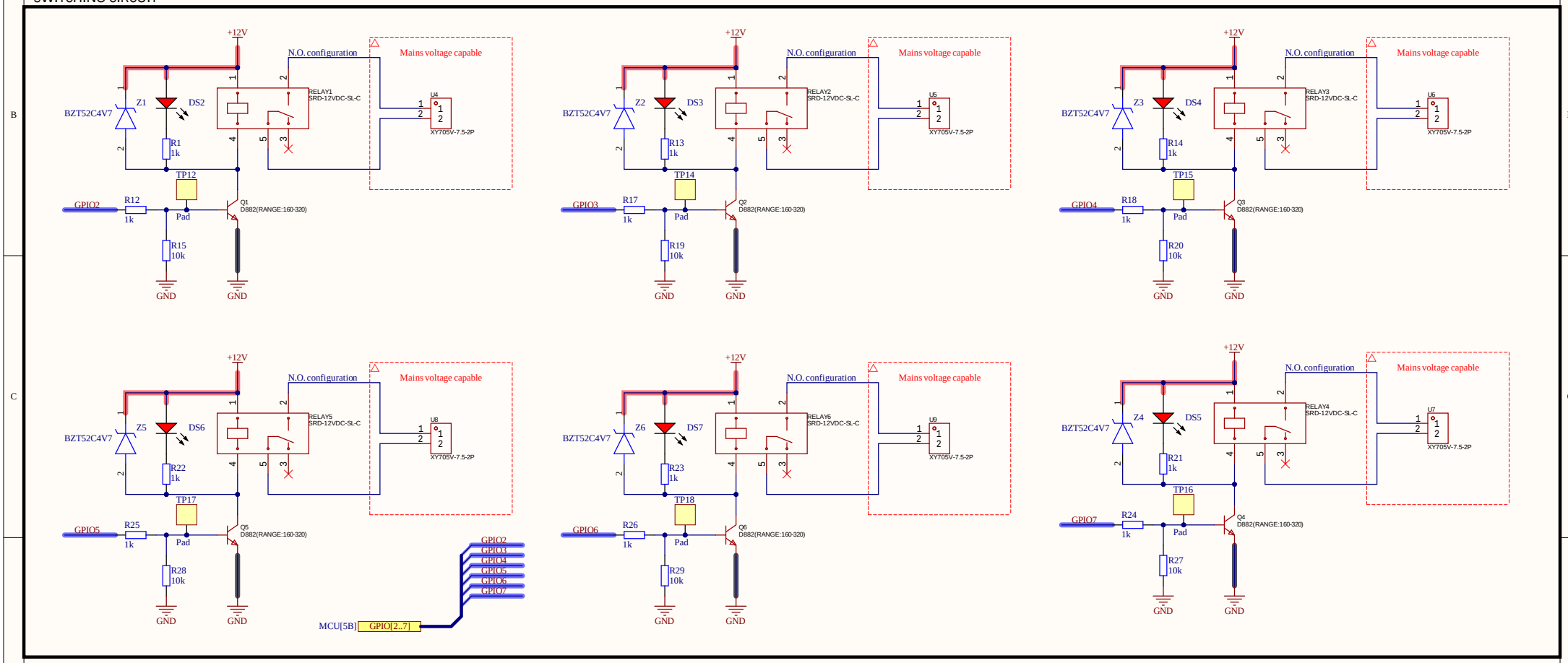

Title		
Power Delivery		
Size: A3	Number	Revision: 1
Date: 2/27/2026		Sheet of 7
File: C:\Users\..\Power Delivery.SchDoc		Drawn By:

CHARGING CIRCUIT

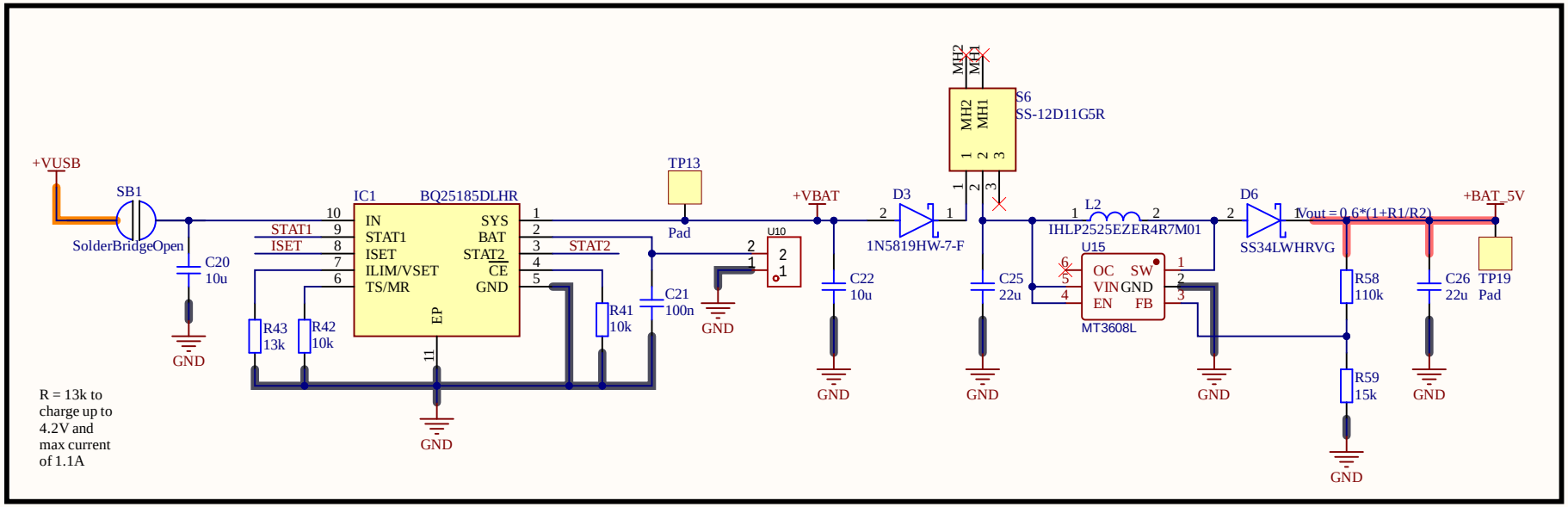

STATUS LED

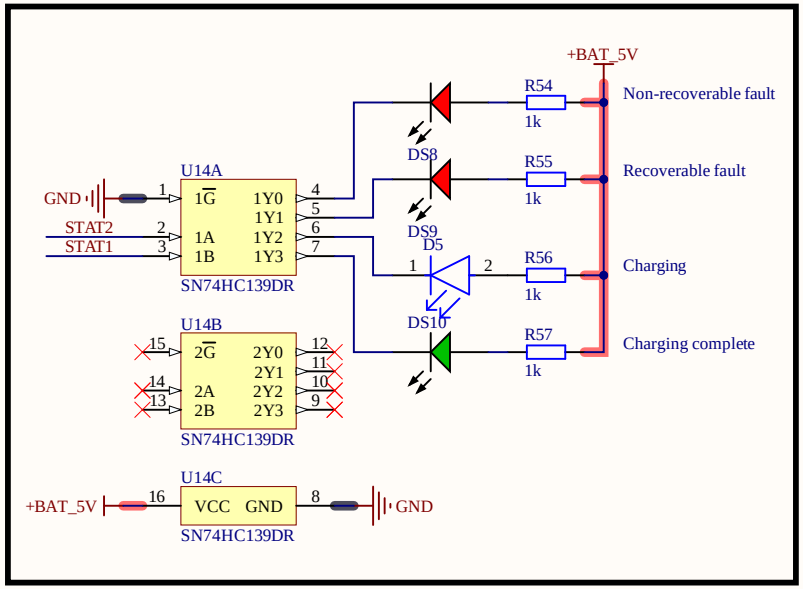

POWER SUPPLY SELECT

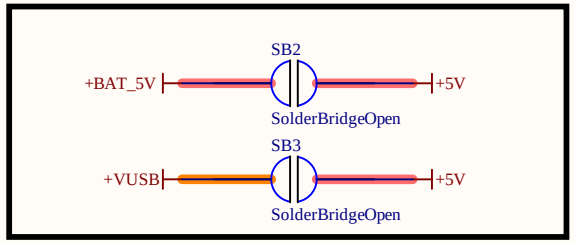

CHARGING CURRENT

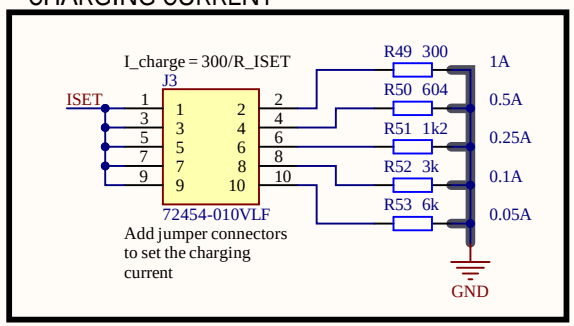

Title		
LiPo Charger		
Size: A4	Number	Revision: 1
Date: 2/27/2026		Sheet of 7
File: C:\Users\..\LiPo Charger.SchDoc		Drawn By:

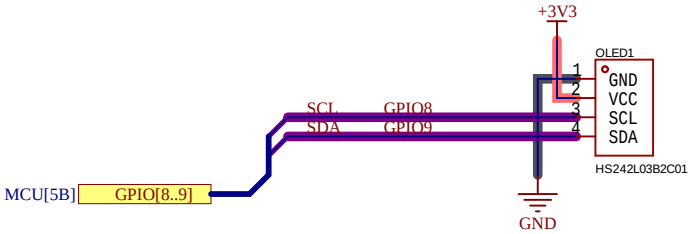

Title Display		
Size A4	Number	Revision 1
Date: 2/27/2026		Sheet of 7
File: C:\Users\..\Display.SchDoc		Drawn By:

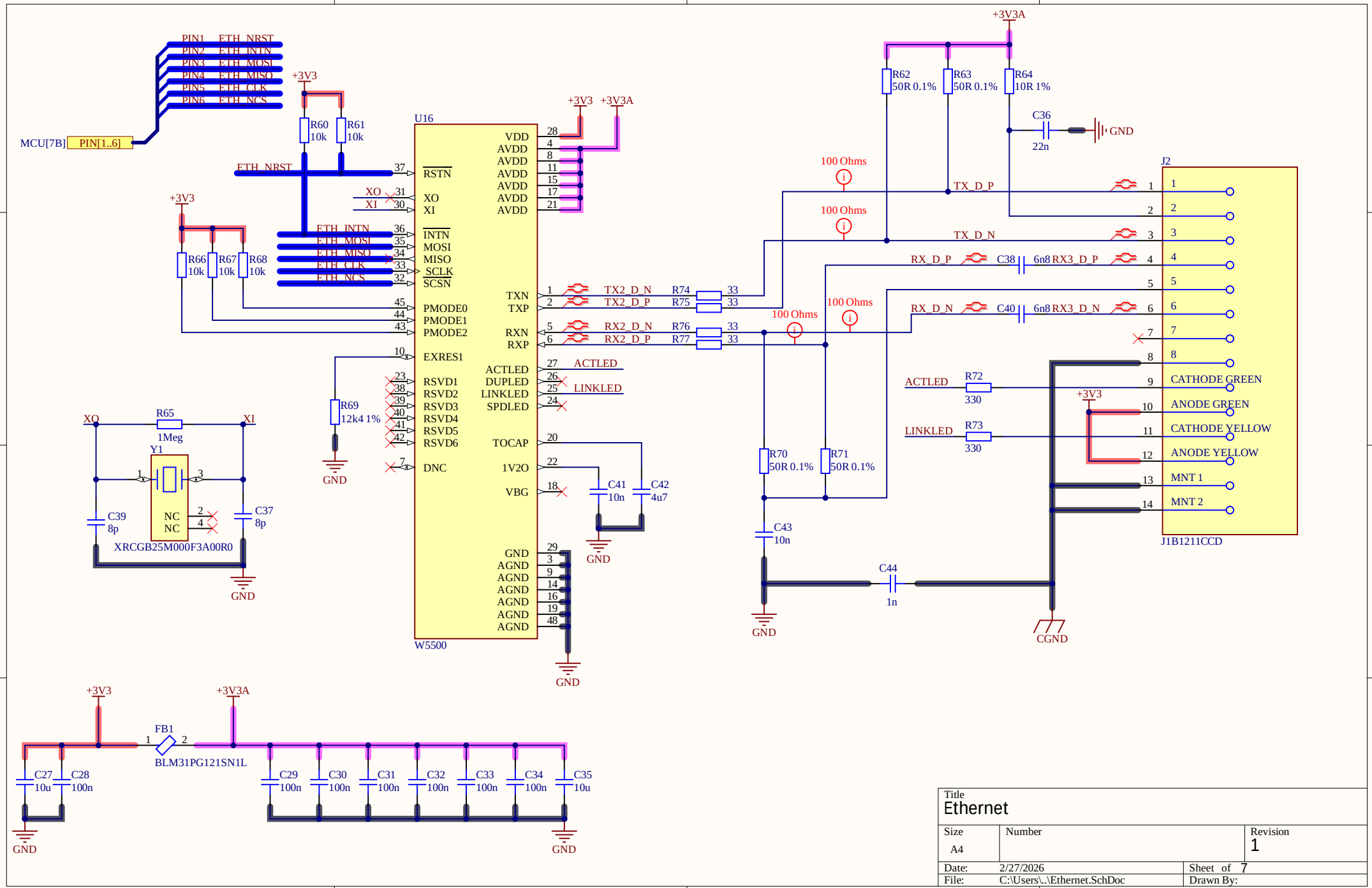

Title: Ethernet		
Size: A4	Number	Revision: 1
Date: 2/27/2026		Sheet of 7
File: C:\Users\..\Ethernet.SchDoc		Drawn By:

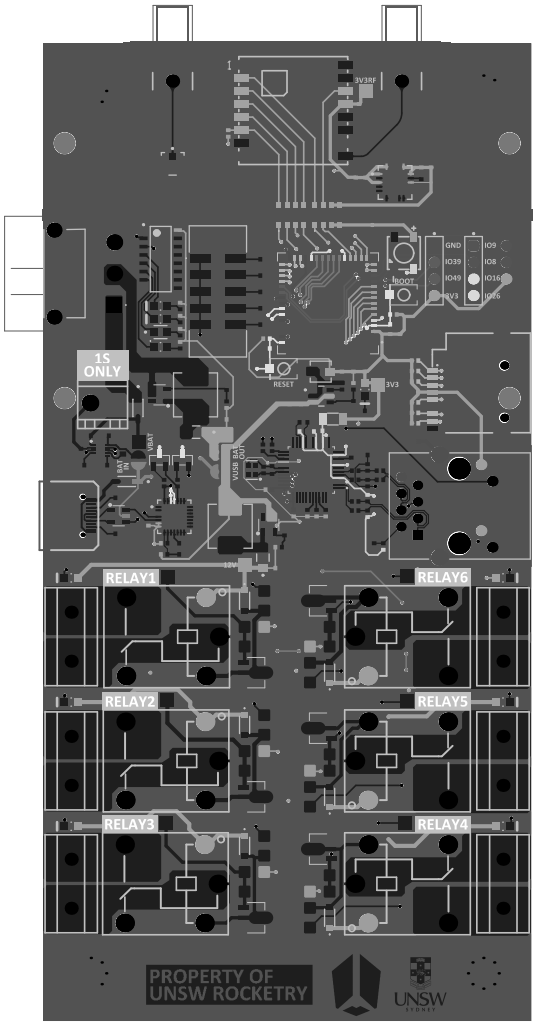

FR4 dielectric: 4.6
Effective dielectric of a microstrip line: (4.6+1)/2 = 2.8
Signal frequency: 915MHz
Effective wavelength: 3*10^8/(sqrt(2.8)*915*10^6) = 0.196
Via fencing distance (Max): 0.196/20 = 0.0098m = 9.8mm ~ 10mm

Line#	Name	Description	Designator	Revision ID	Revision Status	Quantity	Manufacturer 1	Manufacturer Part Number 1	Manufacturer Lifecycle 1	Supplier 1	Supplier Part Number 1	Supplier Unit Price 1	Supplier Subtotal 1
	CL05B104KB54PNC	Capacitor SMD 0402	C1, C2, C5, C10, C12, C14, C15, C18, C19, C21, C28, C29, C30, C31, C32, C33, C34			17							
	CL05A106MQ5NUNC	Capacitor SMD 0402	C3, C4, C9, C11, C13, C16, C17, C20, C22, C27, C35			11							
	GRM155R61A226ME15D	Capacitor SMD 0402	C6, C7, C8, C23, C24, C25, C26			7							
	0402B223K500NT	Capacitor SMD 0402	C36			1							
	0402C0J8R0C500NT	Capacitor SMD 0402	C37, C39			2							
	0402B682K500NT	Capacitor SMD 0402	C38, C40			2							
	CL05B103KB5NNNC	Capacitor SMD 0402	C41, C43			2							
	CL05A475MP8NRNC	Capacitor SMD 0402	C42			1							
	CC0402KRX7R0BB102	Capacitor SMD 0402 100V	C44			1							
	TF-PUSH		CARD1			1							
	LXBLC3-25C3		D1			1							
	1N5819HW-7-F	DIODE SCHOTTKY 40V 1A SOD123	D2, D3			2	Diodes Inc.	1N5819HW-7-F	Volume Production				
	LTST-C170KRKT	LED ORANGE CLEAR SMD	D5			1	Lite-On	LTST-C170KRKT	Volume Production				
	SS34UAHRVG	DIODE SCHOTTKY 40V 3A SOD323W	D6, D9			2	Taiwan Semiconductor	SS34UAHRVG	Volume Production				
	LTST-C170KRKT	LED Red, 75 mW, 54 mcd, -55 to 85 degC, 2-Pin SMD, RoHS, Tape and Reel	D51, D52, D53, D54, D55, D56, D57, D58, D59			9	Lite-On	LTST-C170KRKT	Volume Production				
	LTST-C170KGKT	Ultra Bright AlInGaP Chip LED, 75 mW, -55 to 85 degC, 2-Pin SMD (0805), RoHS, Tape and Reel	D510			1	Lite-On	LTST-C170KGKT	Volume Production				
	BLM15PG1221SN1L	Chip Ferrite Bead Array, 1206, 1000 @ 100MHz, 0.0301, 25%, 3.5A	FB1			1	Murata	BLM15PG1221SN1L	Volume Production				
	BQ25185DLHR	Integrated Circuit	IC1			1							
	TYPE-C-31-M-12	USB Type-C Connector Horizontal SMT	J1			1							
	J1B1211/CCD	CONN JACK 1PORT 100/BASE-T PCB	J2			1	WIZnet	J1B1211/CCD					
	73454-0320LF	Connector	J3			1							
	U.FL-R-SMT-1(80)	CONN U.FL HOPT STRSOCHM SMD	J6			1	HIROSE ELECTRIC	U.FL-R-SMT-1(80)	Volume Production				
	IHLP1212BZER47M01	FIXED IND 2.2UH 3A 46.4MOHM SMD	L1			1	Vishay	IHLP1212BZER47M01	Obsolete				
	IHLP5252EZER47M01	Commercial Inductors, High Saturation Series 4.7uH6.5A 30.3mΩ 20%	L2, L3			2	Vishay	IHLP5252EZER47M01	Volume Production				
	XL-5050RGBCW52B12B		LED1			1							
	HSP43.0/95/2/1		OLED1			1							
	9130041121		P2, P3			2	Würth Elektronik	9130041121					
	DB3(PARIGE 160-320)		Q1, Q2, Q3, Q4, Q5, Q6			6							
	UDS5QLTLG		Q7, Q8			2							
	RC1206FR-7W0RL	Resistor SMD 1206 1k 0.5W	R1, R2, R13, R14, R17, R18, R21, R22, R23, R24, R25, R26			12							
	0402WGF5101TCE	Resistor SMD 0402 5.1k	R2, R8			2							
	0402WGF3001TCE	Resistor SMD 0402	R4, R6, R54, R55, R56, R57			6							
	0402WGF3002TCE	Resistor SMD 0402	R5, R7, R8, R58, R31, R33, R34, R35, R36, R37, R38, R39, R40, R41, R42, R44, R45, R46, R47, R48, R60, R61, R66, R67, R68			25							
	0402WGF3227TCE	Resistor SMD 0402	R6			1							
	0402WGF2212TCE	Resistor SMD 0402	R10			1							
	0402WGF6202TCE	Resistor SMD 0402	R11			1							
	1206WAF3002T5E	Resistor SMD 1206 10k 0.25W	R15, R59, R30, R27, R28, R29			6							
	RC0402FR-074K3L	Resistor SMD 0402	R30			1							
	RC0402FR-0747K5L	Resistor SMD 0402	R32			1							
	0603WAF1302T5E	Resistor SMD 0603	R43			1							
	0402WGF3000TCE	Resistor SMD 0402	R49			1							
	CL0402NI604FP	Resistor SMD 0402	R50			1							
	0402WGF2201TCE	Resistor SMD 0402	R51			1							
	RC0402F30015TS	Resistor SMD 0402	R52			1							
	RC0402FR-076K04L	Resistor SMD 0402	R53			1							
	RC0402FR-071104L	Resistor SMD 0402	R58			1							
	0402WGF5002TCE	Resistor SMD 0402	R59			1							
	RT0402BRD-750RL	Resistor SMD 0402	R62, R63, R70, R71			4							
	0402WGF3003TCE	Resistor SMD 0402	R64			1							
	0402WGF3004TCE	Resistor SMD 0402	R65			1							
	0402WGF1242TCE	Resistor SMD 0402	R69			1							
	0402WGF3300TCE	Resistor SMD 0402	R72, R73			2							
	0402WGF330JTCE	Resistor SMD 0402	R74, R75, R76, R77			4							
	SRD-12VDC-SL-C		RELAY1, RELAY2, RELAY3, RELAY4, RELAY5, RELAY6			6							
	1N4148WS-V-GS-E3/01		RF1, RF2			2							
	YC324-JK-0730RL	Resistor Network	RN1, RN2			2							
	TS-1187A-B-A-B	Switch	S1, S2, S3, S4, S5			5							
	SS-12D10-G5R	Switch	S6			1							
	SolderBridgeOpen	Close the bridge with solder	SB1, SB2, SB3			3							
	TS-1088-AR02016		SW5, SW2			2							
	ESP32-S3-MINI-1U-N8	Bluetooth, WiFi 802.11b/g/n, Bluetooth v5.0 Transceiver Module 2.4GHz Antenna Not Included, U.FL Surface Mount	U1			1							
	TPS61200DDCR	IC REG BLOCK ADJ 1A TSOT23-6	U2			1	Texas Instruments	TPS61200DDCR	Volume Production				
	CP2102N-A02-GQFN28R	IC USB TO UART BRIDGE QFN28	U3			1	Silicon Labs	CP2102N-A02-GQFN28R	Volume Production				
	XY709-7.5-2P		U4, U5, U6, U7, U8, U9			6							
	DB125-3.81-2PRD-S		U10			1							
	NT5608		U11, U15			2							
	TPS7A7003RGWR	IC REG LINEAR POS ADJ 1A 20VQFN	U12			1	Texas Instruments	TPS7A7003RGWR	Volume Production				
	915MHz		U13			1							
	SN74HC139DR	Dual 2-Line To 4-Line Decoders/Demultiplexers, D0016A, LARGE T&R	U14			1	Texas Instruments	SN74HC139DR	Volume Production				
	W5500	Hardwired TCP/IP embedded Ethernet controller	U16			1							
	XRCGB25M000F3A00R0	CRYSTAL 25.0000MHZ 6PF SMD	Y1			1	Murata	XRCGB25M000F3A00R0	Volume Production				
	BZT52C6V7	Zener Diode	Z1, Z2, Z3, Z4, Z5, Z6			6							